ARTWORK APPROVAL FORM

ORDER DETAILS		ITEM DETAILS		MATERIAL COLOURS	
ORDER NUMBER:	X	**FABRIC:**	COTTON	**BASE:**	☐ X
ITEM CODE:	MT4005-14/16/18	**GRAMMAGE:**	350 gsm	**X:**	☐ X
QUANTITY:	X	**ITEM SIZE:**	70 x 140 cm	**X:**	☐ X
		X:	70 x 160 cm	**X:**	☐ X
		X:	100 x 180 cm	**X:**	☐ X

SCALE 1:20

FRONT

TECHNIQUE **RELIEF LOGO**
SIZE -

ATTENTION 1

yourChoice

GENERAL COMMENT:

GENERAL COMMENT:

ATTENTION 1:

ATTENTION 2:

MT4005 14/16/18

WOVEN JACQUARD TOWEL

Material: Cotton
Item size: 14 - 70 x 140 cm (350gsm)
14O - 70 x 140 cm (350gsm)
16 - 70 x 160 cm (350gsm)
16O - 70 x 160 cm (350gsm)
18 -100 x 180 cm (350gsm)
18O -100 x 180 cm (350gsm)
Technique: Relief logo (only front is possible)
Backside is always same colour as front

SCALE 1:1

FRONT
70 x 140 cm

FRONT
70 x 160 cm

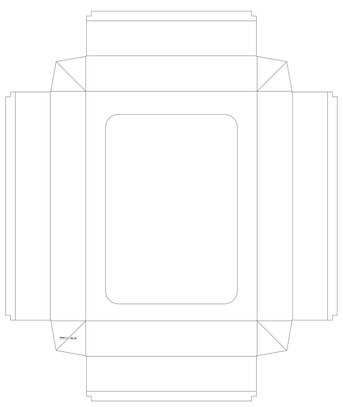

OPTIONAL PACKAGING
FRONT

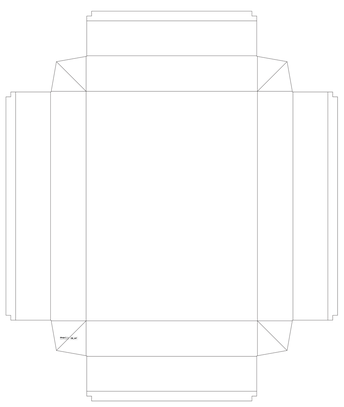

OPTIONAL PACKAGING
BACK

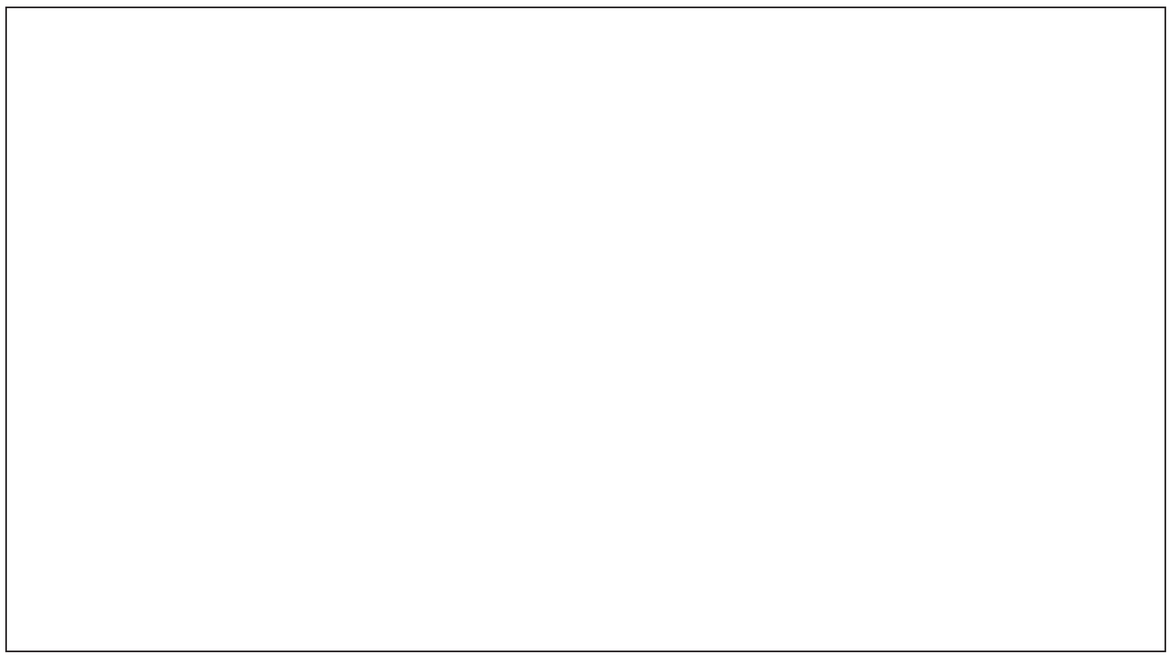

FRONT
100 x 180 cm